Siehe ähnliche Dateien: http://farbe.li.tu-berlin.de/BGI8/BGI8.HTM
Technische Information: http://farbe.li.tu-berlin.de oder http://farbe.li.tu-berlin.de/

TUB-Registrierung: 20220301-BGI8/BGI8L0NP.PDF /.PS
Anwendung für Beurteilung und Messung von Display- oder Druck-Ausgabe
TUB-Material: Code=rha4ta

$XYZ_{W,10}$=94.81 , 100.0 , 107.33
$A_{1,10} = 2{,}5\ (a_{1,10} - a_{1,n,10})\ Y_{10}$
$B_{1,10} = 2{,}5\ B_c\ (b_{1,10} - b_{1,n,10})\ Y_{10}$
$a_{1,10} = a_{20}\ [\ (x_{10} - x_c)\ /y_{10}]$
$b_{1,10} = b_{20}\ [\ z_{10}\ /y_{10}]$
$a_{20} = 1,\ b_{20} = -0{,}4$
$x_c = 0{,}110,\ B_c = 1{,}000$
$C_{AB1,10} = [A_{1,10}^2 + B_{1,10}^2]^{1/2}$
6 *Ostwald*-Farben (o)
von maximalem (m) $C_{AB,10}$ im Buntwertdiagram ($A_{1,10}$, $B_{1,10}$)
Lichtart D65, $Y_{W,10}$=100, $Y_{N,10}$=25

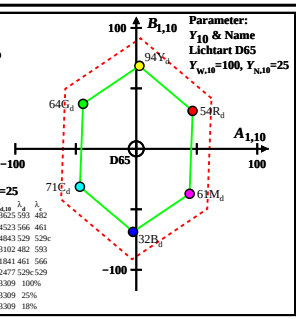

Name	Bereich	$X_{A,10}$	$Y_{A,10}$	$Z_{A,10}$	$x_{A,10}$	$y_{A,10}$	λ_d	λ_c
R_d	561,775	68.58	54.32	26.94	0.4576	0.3625	593	482
Y_d	487,775	81.44	93.61	31.88	0.3935	0.4523	566	461
G_d	487,561	36.66	64.39	31.88	0.2757	0.4843	529	529c
C_d	380,561	50.05	70.8	107.36	0.2193	0.3102	482	593
B_d	380,487	37.18	31.5	102.41	0.2173	0.1841	461	566
M_d	561,487	81.97	60.72	102.41	0.3344	0.2477	529c	529
W_d	380,775	94.81	100.0	107.33	0.3137	0.3309	100%	
N_d	380,775	23.7	25.0	26.83	0.3137	0.3309	25%	
Z_d	380,775	17.06	18.0	19.32	0.3137	0.3309	18%	

BGI80−1A

$XYZ_{W,10}$=96.72 , 99.99 , 81.41
$A_{1,10} = 2{,}5\ (a_{1,10} - a_{1,n,10})\ Y_{10}$
$B_{1,10} = 2{,}5\ B_c\ (b_{1,10} - b_{1,n,10})\ Y_{10}$
$a_{1,10} = a_{20}\ [\ (x_{10} - x_c)\ /y_{10}]$
$b_{1,10} = b_{20}\ [\ z_{10}\ /y_{10}]$
$a_{20} = 1,\ b_{20} = -0{,}4$
$x_c = 0{,}110,\ B_c = 1{,}000$
$C_{AB1,10} = [A_{1,10}^2 + B_{1,10}^2]^{1/2}$
6 *Ostwald*-Farben (o)
von maximalem (m) $C_{AB,10}$ im Buntwertdiagram ($A_{1,10}$, $B_{1,10}$)
Lichtart D50, $Y_{W,10}$=100, $Y_{N,10}$=25

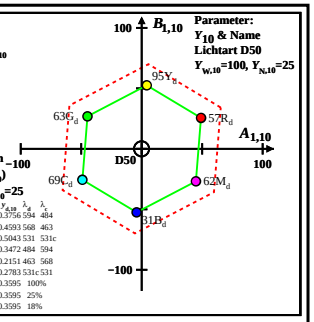

Name	Bereich	$X_{A,10}$	$Y_{A,10}$	$Z_{A,10}$	$x_{A,10}$	$y_{A,10}$	λ_d	λ_c
R_d	565,775	73.59	56.57	20.43	0.4886	0.3756	594	484
Y_d	490,775	86.82	94.52	24.44	0.4218	0.4593	568	463
G_d	490,565	37.5	63.04	24.44	0.3	0.5043	531	531c
C_d	380,565	47.43	68.54	81.43	0.2402	0.3472	484	594
B_d	380,490	34.2	30.6	77.41	0.2405	0.2151	463	568
M_d	565,490	83.51	62.07	77.41	0.3744	0.2783	531c	531
W_d	380,775	96.72	99.99	81.41	0.3477	0.3595	100%	
N_d	380,775	24.18	24.99	20.35	0.3477	0.3595	25%	
Z_d	380,775	17.41	17.99	14.65	0.3477	0.3595	18%	

BGI80−2A

$XYZ_{W,10}$=101.75 , 100.0 , 64.44
$A_{1,10} = 2{,}5\ (a_{1,10} - a_{1,n,10})\ Y_{10}$
$B_{1,10} = 2{,}5\ B_c\ (b_{1,10} - b_{1,n,10})\ Y_{10}$
$a_{1,10} = a_{20}\ [\ (x_{10} - x_c)\ /y_{10}]$
$b_{1,10} = b_{20}\ [\ z_{10}\ /y_{10}]$
$a_{20} = 1,\ b_{20} = -0{,}4$
$x_c = 0{,}110,\ B_c = 1{,}000$
$C_{AB1,10} = [A_{1,10}^2 + B_{1,10}^2]^{1/2}$
6 *Ostwald*-Farben (o)
von maximalem (m) $C_{AB,10}$ im Buntwertdiagram ($A_{1,10}$, $B_{1,10}$)
Lichtart P40, $Y_{W,10}$=100, $Y_{N,10}$=25

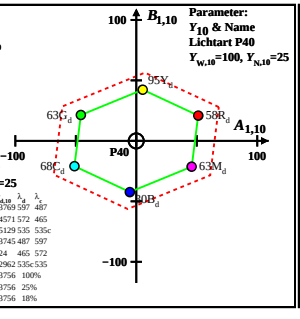

Name	Bereich	$X_{A,10}$	$Y_{A,10}$	$Z_{A,10}$	$x_{A,10}$	$y_{A,10}$	λ_d	λ_c
R_d	569,775	79.02	57.61	16.17	0.5171	0.3769	597	487
Y_d	492,775	93.93	95.1	18.98	0.4515	0.4571	572	465
G_d	492,569	40.44	62.59	18.98	0.3314	0.5129	535	535c
C_d	380,569	48.28	67.51	64.46	0.2678	0.3745	487	597
B_d	380,492	33.38	30.02	61.65	0.2669	0.24	465	572
M_d	569,492	86.87	62.53	61.65	0.4115	0.2962	535c	535
W_d	380,775	101.75	100.0	64.44	0.3822	0.3756	100%	
N_d	380,775	25.43	25.0	16.11	0.3822	0.3756	25%	
Z_d	380,775	18.31	18.0	11.6	0.3822	0.3756	18%	

BGI80−3A

$XYZ_{W,10}$=111.15 , 99.99 , 35.19
$A_{1,10} = 2{,}5\ (a_{1,10} - a_{1,n,10})\ Y_{10}$
$B_{1,10} = 2{,}5\ B_c\ (b_{1,10} - b_{1,n,10})\ Y_{10}$
$a_{1,10} = a_{20}\ [\ (x_{10} - x_c)\ /y_{10}]$
$b_{1,10} = b_{20}\ [\ z_{10}\ /y_{10}]$
$a_{20} = 1,\ b_{20} = -0{,}4$
$x_c = 0{,}110,\ B_c = 1{,}000$
$C_{AB1,10} = [A_{1,10}^2 + B_{1,10}^2]^{1/2}$
6 *Ostwald*-Farben (o)
von maximalem (m) $C_{AB,10}$ im Buntwertdiagram ($A_{1,10}$, $B_{1,10}$)
Lichtart A00, $Y_{W,10}$=100, $Y_{N,10}$=25

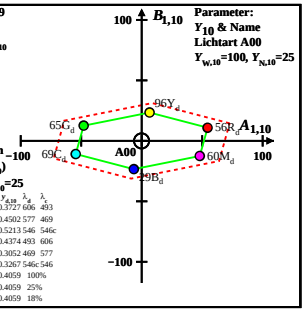

Name	Bereich	$X_{A,10}$	$Y_{A,10}$	$Z_{A,10}$	$x_{A,10}$	$y_{A,10}$	λ_d	λ_c
R_d	575,775	85.43	56.02	8.83	0.5684	0.3727	606	493
Y_d	498,775	107.1	196.32	10.48	0.5006	0.4502	577	469
G_d	498,575	49.57	65.4	10.48	0.3951	0.5213	546	546c
C_d	380,575	53.63	69.1	35.2	0.3395	0.4374	493	606
B_d	380,498	31.96	28.79	33.55	0.3389	0.3052	469	577
M_d	575,498	89.5	59.71	33.55	0.4896	0.3267	546c	546
W_d	380,775	111.15	99.99	35.19	0.4511	0.4059	100%	
N_d	380,775	27.78	24.99	8.79	0.4511	0.4059	25%	
Z_d	380,775	20.0	18.0	6.33	0.4511	0.4059	18%	

BGI80−4A

$XYZ_{W,10}$=99.99 , 99.99 , 100.0
$A_{1,10} = 2{,}5\ (a_{1,10} - a_{1,n,10})\ Y_{10}$
$B_{1,10} = 2{,}5\ B_c\ (b_{1,10} - b_{1,n,10})\ Y_{10}$
$a_{1,10} = a_{20}\ [\ (x_{10} - x_c)\ /y_{10}]$
$b_{1,10} = b_{20}\ [\ z_{10}\ /y_{10}]$
$a_{20} = 1,\ b_{20} = -0{,}4$
$x_c = 0{,}110,\ B_c = 1{,}000$
$C_{AB1,10} = [A_{1,10}^2 + B_{1,10}^2]^{1/2}$
6 *Ostwald*-Farben (o)
von maximalem (m) $C_{AB,10}$ im Buntwertdiagram ($A_{1,10}$, $B_{1,10}$)
Lichtart E00, $Y_{W,10}$=100, $Y_{N,10}$=25

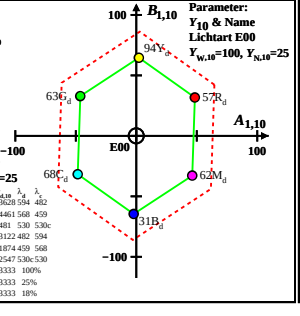

Name	Bereich	$X_{A,10}$	$Y_{A,10}$	$Z_{A,10}$	$x_{A,10}$	$y_{A,10}$	λ_d	λ_c
R_d	564,775	74.64	56.8	25.1	0.4768	0.3628	594	482
Y_d	487,775	87.39	94.42	29.8	0.4129	0.4461	568	459
G_d	487,564	37.84	62.71	29.8	0.2902	0.481	530	530c
C_d	380,564	50.46	68.31	100.03	0.2306	0.3122	482	594
B_d	380,487	37.71	30.69	95.33	0.2303	0.1874	459	568
M_d	564,487	87.27	62.4	95.33	0.3561	0.2547	530c	530
W_d	380,775	99.99	99.99	100.0	0.3333	0.3333	100%	
N_d	380,775	24.99	24.99	25.0	0.3333	0.3333	25%	
Z_d	380,775	17.99	17.99	18.0	0.3333	0.3333	18%	

BGI80−5A

$XYZ_{W,10}$=97.28 , 99.99 , 116.14
$A_{1,10} = 2{,}5\ (a_{1,10} - a_{1,n,10})\ Y_{10}$
$B_{1,10} = 2{,}5\ B_c\ (b_{1,10} - b_{1,n,10})\ Y_{10}$
$a_{1,10} = a_{20}\ [\ (x_{10} - x_c)\ /y_{10}]$
$b_{1,10} = b_{20}\ [\ z_{10}\ /y_{10}]$
$a_{20} = 1,\ b_{20} = -0{,}4$
$x_c = 0{,}110,\ B_c = 1{,}000$
$C_{AB1,10} = [A_{1,10}^2 + B_{1,10}^2]^{1/2}$
6 *Ostwald*-Farben (o)
von maximalem (m) $C_{AB,10}$ im Buntwertdiagram ($A_{1,10}$, $B_{1,10}$)
Lichtart C00, $Y_{W,10}$=100, $Y_{N,10}$=25

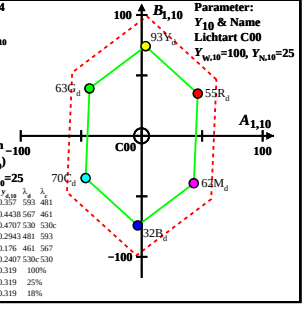

Name	Bereich	$X_{A,10}$	$Y_{A,10}$	$Z_{A,10}$	$x_{A,10}$	$y_{A,10}$	λ_d	λ_c
R_d	561,775	70.18	55.16	29.15	0.4542	0.357	593	481
Y_d	486,775	82.69	92.93	33.75	0.3949	0.4438	567	461
G_d	486,561	36.93	62.87	33.75	0.2765	0.4707	530	530c
C_d	380,561	51.54	69.96	116.17	0.2168	0.2943	481	593
B_d	380,486	39.03	32.18	111.57	0.2135	0.176	461	567
M_d	561,486	84.79	62.25	111.57	0.3278	0.2407	530c	530
W_d	380,775	97.28	99.99	116.14	0.3103	0.319	100%	
N_d	380,775	24.32	24.99	29.03	0.3103	0.319	25%	
Z_d	380,775	17.51	18.0	20.9	0.3103	0.319	18%	

BGI80−6A

$XYZ_{W,10}$=102.37 , 99.99 , 81.25
$A_{1,10} = 2{,}5\ (a_{1,10} - a_{1,n,10})\ Y_{10}$
$B_{1,10} = 2{,}5\ B_c\ (b_{1,10} - b_{1,n,10})\ Y_{10}$
$a_{1,10} = a_{20}\ [\ (x_{10} - x_c)\ /y_{10}]$
$b_{1,10} = b_{20}\ [\ z_{10}\ /y_{10}]$
$a_{20} = 1,\ b_{20} = -0{,}4$
$x_c = 0{,}110,\ B_c = 1{,}000$
$C_{AB1,10} = [A_{1,10}^2 + B_{1,10}^2]^{1/2}$
6 *Ostwald*-Farben (o)
von maximalem (m) $C_{AB,10}$ im Buntwertdiagram ($A_{1,10}$, $B_{1,10}$)
Lichtart P00, $Y_{W,10}$=100, $Y_{N,10}$=25

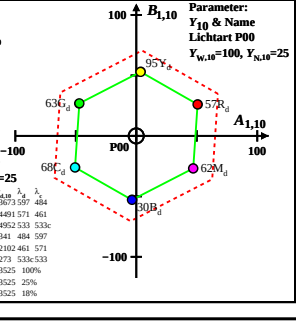

Name	Bereich	$X_{A,10}$	$Y_{A,10}$	$Z_{A,10}$	$x_{A,10}$	$y_{A,10}$	λ_d	λ_c
R_d	567,775	78.08	57.18	20.39	0.5016	0.3673	597	484
Y_d	489,775	92.27	94.96	24.2	0.4364	0.4491	571	461
G_d	489,567	39.88	62.88	24.2	0.3141	0.4952	533	533c
C_d	380,567	50.01	67.94	81.27	0.251	0.341	484	597
B_d	380,489	35.81	30.16	77.46	0.2497	0.2102	461	571
M_d	567,489	88.21	62.24	77.46	0.387	0.273	533c	533
W_d	380,775	102.37	99.99	81.25	0.3609	0.3525	100%	
N_d	380,775	25.59	24.99	20.31	0.3609	0.3525	25%	
Z_d	380,775	18.42	18.0	14.62	0.3609	0.3525	18%	

BGI80−7A

$XYZ_{W,10}$=97.65 , 100.0 , 118.42
$A_{1,10} = 2{,}5\ (a_{1,10} - a_{1,n,10})\ Y_{10}$
$B_{1,10} = 2{,}5\ B_c\ (b_{1,10} - b_{1,n,10})\ Y_{10}$
$a_{1,10} = a_{20}\ [\ (x_{10} - x_c)\ /y_{10}]$
$b_{1,10} = b_{20}\ [\ z_{10}\ /y_{10}]$
$a_{20} = 1,\ b_{20} = -0{,}4$
$x_c = 0{,}110,\ B_c = 1{,}000$
$C_{AB1,10} = [A_{1,10}^2 + B_{1,10}^2]^{1/2}$
6 *Ostwald*-Farben (o)
von maximalem (m) $C_{AB,10}$ im Buntwertdiagram ($A_{1,10}$, $B_{1,10}$)
Lichtart Q00, $Y_{W,10}$=100, $Y_{N,10}$=25

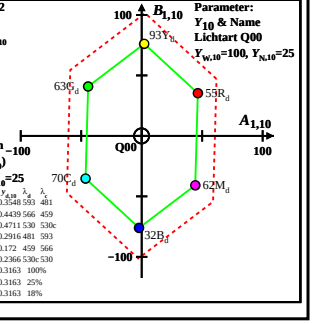

Name	Bereich	$X_{A,10}$	$Y_{A,10}$	$Z_{A,10}$	$x_{A,10}$	$y_{A,10}$	λ_d	λ_c
R_d	561,775	70.11	54.91	29.72	0.453	0.3548	593	481
Y_d	486,775	82.53	93.19	34.21	0.3931	0.4439	566	459
G_d	486,561	36.93	63.38	34.21	0.2745	0.4711	530	530c
C_d	380,561	52.07	70.21	118.45	0.2162	0.2916	481	593
B_d	380,486	39.64	31.93	113.96	0.2136	0.172	459	566
M_d	561,486	85.25	61.74	113.96	0.3266	0.2366	530c	530
W_d	380,775	97.65	100.0	118.42	0.3089	0.3163	100%	
N_d	380,775	24.41	25.0	29.6	0.3089	0.3163	25%	
Z_d	380,775	17.57	18.0	21.31	0.3089	0.3163	18%	

BGI80−8A

$XYZ_{W,10}$=94.81 , 100.0 , 107.33
$A_{2,10} = 2{,}5\ (a_{2,10} - a_{2,n,10})\ Y_{10}$
$B_{2,10} = 2{,}5\ B_c\ (b_{2,10} - b_{2,n,10})\ Y_{10}$
$a_{2,10} = a_{20}\ [\ (x_{10} - x_c)\ /y_{10}]$
$b_{2,10} = b_{20}\ [\ z_{10}\ /y_{10}]$
$a_{20} = 1,\ b_{20} = -0{,}4$
$x_c = 0{,}800,\ B_c = 0{,}800$
$C_{AB2,10} = [A_{2,10}^2 + B_{2,10}^2]^{1/2}$
6 *Ostwald*-Farben (o)
von maximalem (m) $C_{AB,10}$ im Buntwertdiagram ($A_{2,10}$, $B_{2,10}$)
Lichtart D65, $Y_{W,10}$=100, $Y_{N,10}$=25

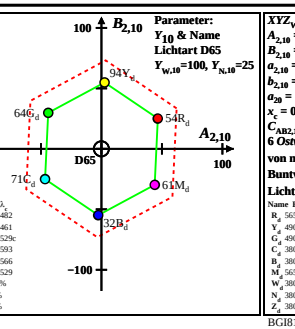

Name	Bereich	$X_{A,10}$	$Y_{A,10}$	$Z_{A,10}$	$x_{A,10}$	$y_{A,10}$	λ_d	λ_c
R_d	561,775	68.58	54.32	26.94	0.4576	0.3625	593	482
Y_d	487,775	81.44	93.61	31.88	0.3935	0.4523	566	461
G_d	487,561	36.66	64.39	31.88	0.2757	0.4843	529	529c
C_d	380,561	50.05	70.8	107.36	0.2193	0.3102	482	593
B_d	380,487	37.18	31.5	102.41	0.2173	0.1841	461	566
M_d	561,487	81.97	60.72	102.41	0.3344	0.2477	529c	529
W_d	380,775	94.81	100.0	107.33	0.3137	0.3309	100%	
N_d	380,775	23.7	25.0	26.83	0.3137	0.3309	25%	
Z_d	380,775	17.06	18.0	19.32	0.3137	0.3309	18%	

BGI81−1A

$XYZ_{W,10}$=96.72 , 99.99 , 81.41
$A_{2,10} = 2{,}5\ (a_{2,10} - a_{2,n,10})\ Y_{10}$
$B_{2,10} = 2{,}5\ B_c\ (b_{2,10} - b_{2,n,10})\ Y_{10}$
$a_{2,10} = a_{20}\ [\ (x_{10} - x_c)\ /y_{10}]$
$b_{2,10} = b_{20}\ [\ z_{10}\ /y_{10}]$
$a_{20} = 1,\ b_{20} = -0{,}4$
$x_c = 0{,}110,\ B_c = 1{,}000$
$C_{AB2,10} = [A_{2,10}^2 + B_{2,10}^2]^{1/2}$
6 *Ostwald*-Farben (o)
von maximalem (m) $C_{AB,10}$ im Buntwertdiagram ($A_{2,10}$, $B_{2,10}$)
Lichtart D50, $Y_{W,10}$=100, $Y_{N,10}$=25

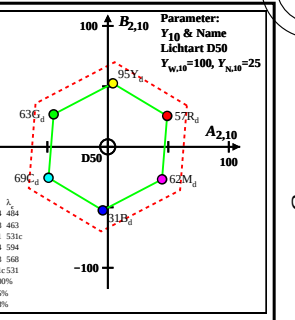

Name	Bereich	$X_{A,10}$	$Y_{A,10}$	$Z_{A,10}$	$x_{A,10}$	$y_{A,10}$	λ_d	λ_c
R_d	565,775	73.59	56.57	20.43	0.4886	0.3756	594	484
Y_d	490,775	86.82	94.52	24.44	0.4218	0.4593	568	463
G_d	490,565	37.5	63.04	24.44	0.3	0.5043	531	531c
C_d	380,565	47.43	68.54	81.43	0.2402	0.3472	484	594
B_d	380,490	34.2	30.6	77.41	0.2405	0.2151	463	568
M_d	565,490	83.51	62.07	77.41	0.3744	0.2783	531c	531
W_d	380,775	96.72	99.99	81.41	0.3477	0.3595	100%	
N_d	380,775	24.18	24.99	20.35	0.3477	0.3595	25%	
Z_d	380,775	17.41	17.99	14.65	0.3477	0.3595	18%	

BGI81−2A

$XYZ_{W,10}$=101.75 , 100.0 , 64.44
$A_{2,10} = 2{,}5\ (a_{2,10} - a_{2,n,10})\ Y_{10}$
$B_{2,10} = 2{,}5\ B_c\ (b_{2,10} - b_{2,n,10})\ Y_{10}$
$a_{2,10} = a_{20}\ [\ (x_{10} - x_c)\ /y_{10}]$
$b_{2,10} = b_{20}\ [\ z_{10}\ /y_{10}]$
$a_{20} = 1,\ b_{20} = -0{,}4$
$x_c = 0{,}110,\ B_c = 1{,}300$
$C_{AB2,10} = [A_{2,10}^2 + B_{2,10}^2]^{1/2}$
6 *Ostwald*-Farben (o)
von maximalem (m) $C_{AB,10}$ im Buntwertdiagram ($A_{2,10}$, $B_{2,10}$)
Lichtart P40, $Y_{W,10}$=100, $Y_{N,10}$=25

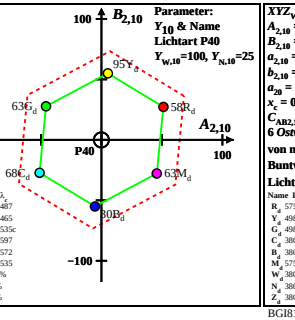

Name	Bereich	$X_{A,10}$	$Y_{A,10}$	$Z_{A,10}$	$x_{A,10}$	$y_{A,10}$	λ_d	λ_c
R_d	569,775	79.02	57.61	16.17	0.5171	0.3769	597	487
Y_d	492,775	93.93	95.1	18.98	0.4515	0.4571	572	465
G_d	492,569	40.44	62.59	18.98	0.3314	0.5129	535	535c
C_d	380,569	48.28	67.51	64.46	0.2678	0.3745	487	597
B_d	380,492	33.38	30.02	61.65	0.2669	0.24	465	572
M_d	569,492	86.87	62.53	61.65	0.4115	0.2962	535c	535
W_d	380,775	101.75	100.0	64.44	0.3822	0.3756	100%	
N_d	380,775	25.43	25.0	16.11	0.3822	0.3756	25%	
Z_d	380,775	18.31	18.0	11.6	0.3822	0.3756	18%	

BGI81−3A

$XYZ_{W,10}$=111.15 , 99.99 , 35.19
$A_{2,10} = 2{,}5\ (a_{2,10} - a_{2,n,10})\ Y_{10}$
$B_{2,10} = 2{,}5\ B_c\ (b_{2,10} - b_{2,n,10})\ Y_{10}$
$a_{2,10} = a_{20}\ [\ (x_{10} - x_c)\ /y_{10}]$
$b_{2,10} = b_{20}\ [\ z_{10}\ /y_{10}]$
$a_{20} = 1,\ b_{20} = -0{,}4$
$x_c = 0{,}110,\ B_c = 2{,}500$
$C_{AB2,10} = [A_{2,10}^2 + B_{2,10}^2]^{1/2}$
6 *Ostwald*-Farben (o)
von maximalem (m) $C_{AB,10}$ im Buntwertdiagram ($A_{2,10}$, $B_{2,10}$)
Lichtart A00, $Y_{W,10}$=100, $Y_{N,10}$=25

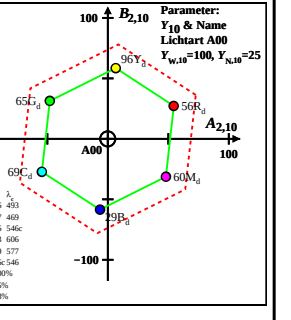

Name	Bereich	$X_{A,10}$	$Y_{A,10}$	$Z_{A,10}$	$x_{A,10}$	$y_{A,10}$	λ_d	λ_c
R_d	575,775	85.43	56.02	8.83	0.5684	0.3727	606	493
Y_d	498,775	107.1	196.32	10.48	0.5006	0.4502	577	469
G_d	498,575	49.57	65.4	10.48	0.3951	0.5213	546	546c
C_d	380,575	53.63	69.1	35.2	0.3395	0.4374	493	606
B_d	380,498	31.96	28.79	33.55	0.3389	0.3052	469	577
M_d	575,498	89.5	59.71	33.55	0.4896	0.3267	546c	546
W_d	380,775	111.15	99.99	35.19	0.4511	0.4059	100%	
N_d	380,775	27.78	24.99	8.79	0.4511	0.4059	25%	
Z_d	380,775	20.0	18.0	6.33	0.4511	0.4059	18%	

BGI81−4A

$XYZ_{W,10}$=99.99 , 99.99 , 100.0
$A_{2,10} = 2{,}5\ (a_{2,10} - a_{2,n,10})\ Y_{10}$
$B_{2,10} = 2{,}5\ B_c\ (b_{2,10} - b_{2,n,10})\ Y_{10}$
$a_{2,10} = a_{20}\ [\ (x_{10} - x_c)\ /y_{10}]$
$b_{2,10} = b_{20}\ [\ z_{10}\ /y_{10}]$
$a_{20} = 1,\ b_{20} = -0{,}4$
$x_c = 0{,}110,\ B_c = 0{,}900$
$C_{AB2,10} = [A_{2,10}^2 + B_{2,10}^2]^{1/2}$
6 *Ostwald*-Farben (o)
von maximalem (m) $C_{AB,10}$ im Buntwertdiagram ($A_{2,10}$, $B_{2,10}$)
Lichtart E00, $Y_{W,10}$=100, $Y_{N,10}$=25

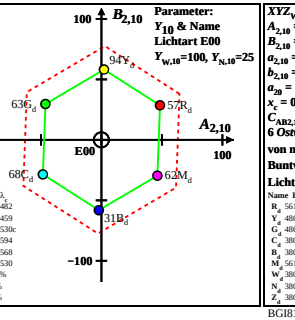

Name	Bereich	$X_{A,10}$	$Y_{A,10}$	$Z_{A,10}$	$x_{A,10}$	$y_{A,10}$	λ_d	λ_c
R_d	564,775	74.64	56.8	25.1	0.4768	0.3628	594	482
Y_d	487,775	87.39	94.42	29.8	0.4129	0.4461	568	459
G_d	487,564	37.84	62.71	29.8	0.2902	0.481	530	530c
C_d	380,564	50.46	68.31	100.03	0.2306	0.3122	482	594
B_d	380,487	37.71	30.69	95.33	0.2303	0.1874	459	568
M_d	564,487	87.27	62.4	95.33	0.3561	0.2547	530c	530
W_d	380,775	99.99	99.99	100.0	0.3333	0.3333	100%	
N_d	380,775	24.99	24.99	25.0	0.3333	0.3333	25%	
Z_d	380,775	17.99	17.99	18.0	0.3333	0.3333	18%	

BGI81−5A

$XYZ_{W,10}$=97.28 , 99.99 , 116.14
$A_{2,10} = 2{,}5\ (a_{2,10} - a_{2,n,10})\ Y_{10}$
$B_{2,10} = 2{,}5\ B_c\ (b_{2,10} - b_{2,n,10})\ Y_{10}$
$a_{2,10} = a_{20}\ [\ (x_{10} - x_c)\ /y_{10}]$
$b_{2,10} = b_{20}\ [\ z_{10}\ /y_{10}]$
$a_{20} = 1,\ b_{20} = -0{,}4$
$x_c = 0{,}110,\ B_c = 0{,}700$
$C_{AB2,10} = [A_{2